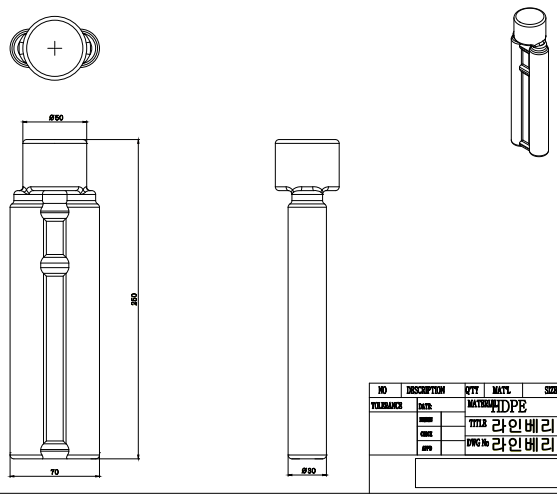

NO	DESCRIPTION	QTY	MATL	SIZE	WEIGHT	REMARK
TOLERANCE	DATE:		MATERIAL HDPE			SCALE
	DRAWN		TITLE 라인베리어 연결핀			SHEET
	CHECK					
	APPD		DWG No 라인베리어 연결핀			SHEET No

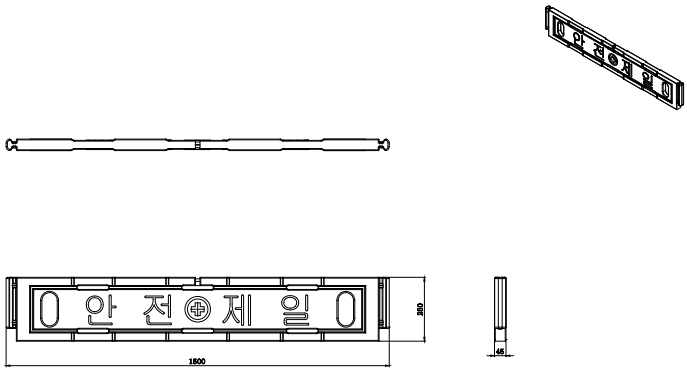

NO	DESCRIPTION	QTY	MATL	SIZE	WEIGHT	REMARK
TOLERANCE	DATE:		MATERIAL HDPE			SCALE
	DRAWN		TITLE PE휀스			SHEET
	CHECK					
	APPD		DWG No PE휀스			SHEET No

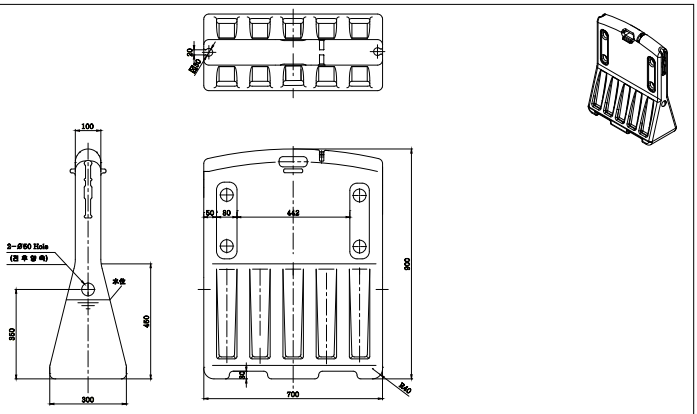
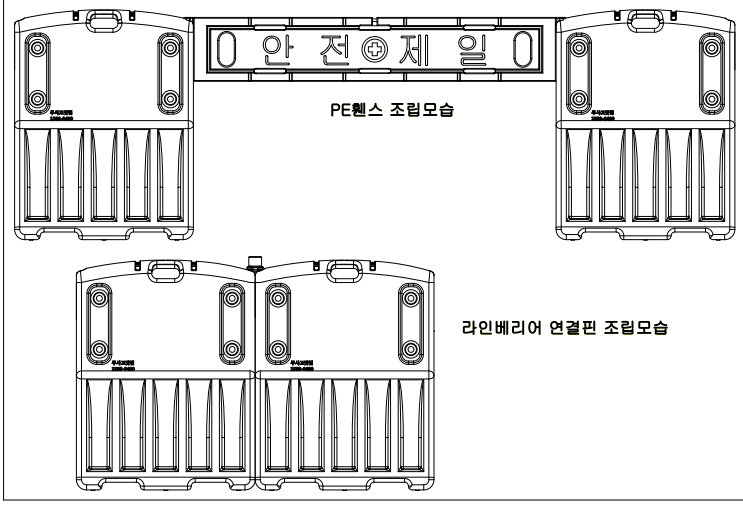
TOLERANCE	DATE: 02.06.07	MATERIAL HDPE	SCALE 1/5
	DRAWN	TITLE 라인베리어	SHEET 1
	CHECK		
	APPD	DWG No 라인베리어	SHEET 1